NJCAT TECHNOLOGY VERIFICATION

Aqua-Swirl® XCelerator
Stormwater Treatment System

AquaShield™, Inc.

June 2019

Revised Tables A-1 and A-2, January 2020

TABLE OF CONTENTS

Page

List of Figures

Page

List of Tables

Page

1. Description of Technology

The Aqua-Swirl® XCelerator Stormwater Treatment System is a vortex hydrodynamic separator designed and supplied by AquaShield™, Inc. Aqua-Swirl® XCelerator technology removes pollutants including suspended solids, debris, floatables and free-floating oil from stormwater runoff.

The Aqua-Swirl® XCelerator is a rapid or high flow rate device that has no moving parts and operates on gravity flow or movement of the stormwater runoff entering the structure. Operation begins when stormwater enters the swirl chamber by means of its tangential inlet pipe thereby inducing a circular (swirl or vortex) flow pattern. The swirl chamber diameter represents the effective treatment area of the device. Both sediment capture and sediment storage is accomplished within the single swirl chamber. A combination of gravitational and hydrodynamic drag forces results in solids dropping out of the flow and migrating to the base of the swirl chamber where velocities are the lowest. The treated flow exits the Aqua-Swirl® XCelerator behind the arched inner baffle and through an outlet structure positioned at the effluent outlet pipe opening. The outlet structure controls the flow of treated water out of the treatment chamber and is sized to the maximum treatment flow rate (MTFR) of the system. The baffle has a high-flow bypass weir which allows flows in excess of the MTFR to spill over it and continue to the outlet structure without passing through the vortex area. Thus, internal bypass flow volumes that exceed the MTFR never comingle with the flow volume representative of the effective treatment area.

2. Laboratory Testing

Laboratory testing has been performed to independently verify that the Aqua-Swirl® XCelerator is eligible for certification by the New Jersey Department of Environmental Protection (NJDEP) as a 50% Total Suspended Solids (TSS) removal device. The Aqua-Swirl® XCelerator Model XC-2 was tested in accordance with the "*New Jersey Department of Environmental Protection Laboratory Protocol to Assess Total Suspended Solids Removal by a Hydrodynamic Sedimentation Manufactured Treatment Device*" (NJDEP 2013). Testing was conducted in Chattanooga, Tennessee at the hydraulics laboratory of AquaShield™, Inc. under the supervision of Southern Environmental Technologies, Inc. of Sewanee, Tennessee. The observer was pre-approved by the New Jersey Corporation for Advanced Technology (NJCAT) as cited in the XC-2 Quality Assurance Project Plan (QAPP).

The test sediment and particle size distribution (PSD) for both the XC-2 sediment (TSS) removal efficiency test and the scour test was independently prepared at the Good Harbour Laboratories facility in Mississauga, Ontario. All PSD testing was performed in accordance with ASTM D 422-63 (2007) by Maxxam Analytics in Mississauga, Ontario. All test sediment was collected, labeled and security sealed prior to shipment to the AquaShield™ test facility.

Test sediment used for the XC-2 sediment (TSS) removal efficiency test was the same test sediment used for the AquaShield™ Aqua-Filter™ AF-2.1 testing program which was verified by NJCAT in a report dated June 2018. At the conclusion of the Aqua-Filter™ AF-2.1 testing program, the test sediment drum was sealed by the observer (Southern Environmental Technologies) and remained sealed until the same drum was opened by the independent observer for this XC-2 sediment removal efficiency testing program.

Test sediment used for the XC-2 scour test was the same test sediment used for the AquaShield™ Aqua-Swirl® AS-3 testing program which was verified by NJCAT in a report dated November 2016. The scour test sediment drum was security sealed by the observer (Good Harbour Laboratories) at the conclusion of the AS-3 testing program. The scour test sediment drum remained sealed until opened by the independent observer for this XC-2 scour testing program.

2.1 Test Unit

The test unit is a full scale, commercially available Aqua-Swirl® XCelerator Model XC-2 constructed of polymer coated steel (**Figure 1**). Key dimensions of the test unit were measured by the independent observer prior to beginning this testing program to ensure that the assembly was consistent with a commercial XC-2. The false floor depth was also confirmed by the observer.

2.2 Test Setup

The XC-2 test loop is illustrated in **Figure 2** as a recirculation system designed to provide metered flow up to approximately 1.8 cfs. Both a 2,700 gallon and a 2,300 gallon water supply tank were used for this testing program. A 10 hp pump draws water from the 2,300 gallon supply tank via a 6 inch diameter Schedule 40 PVC pipe. A background sediment filtration assembly is located downstream of the pump and upstream of the background sample port location. Influent piping from the filter assembly is routed to an elevated platform where the background sample port and influent test sediment feeder are positioned. This background sample port is used in association with the sediment removal efficiency test. The 6 inch diameter influent pipe then leads from the pump and the background sample port. The 6 inch diameter pipe is expanded to a 12 inch diameter pipe that leads directly to a tee for injecting sediment into the crown of the influent pipe upstream of the test unit. The sediment injection location is 59.5 inches upstream of the XC-2. The 12 inch pipe then leads from the sediment feeder straight to the 12 inch swirl chamber stubout and into the test unit. Two stubout piping connections are made to the XC-2 using Fernco™ couplers for influent and effluent flow. These couplers provide a smooth transitional flow path between the influent and effluent PVC piping and test unit stubouts. Effluent piping runs 15.5 feet to the effluent sample location at the edge of the 2,700 gallon water supply tank. Water free falls from the effluent pipe into the 2,700 gallon tank where effluent samples are collected by grab sampling from that flow stream. A single continuous sweeping motion through the entire flow stream is used to collect effluent grab samples for both the sediment removal efficiency test and the scour test.

The inflow to the test unit is measured using a Badger M-2000 flow meter. The flow rate is recorded at a minimum of every 60 seconds throughout the duration of the test using a Lascar EL-USB-4 Data Logger. The accuracy of the flow measurement is ±2%. The maximum allowable coefficient of variation (COV) for flow documentation is 0.03.

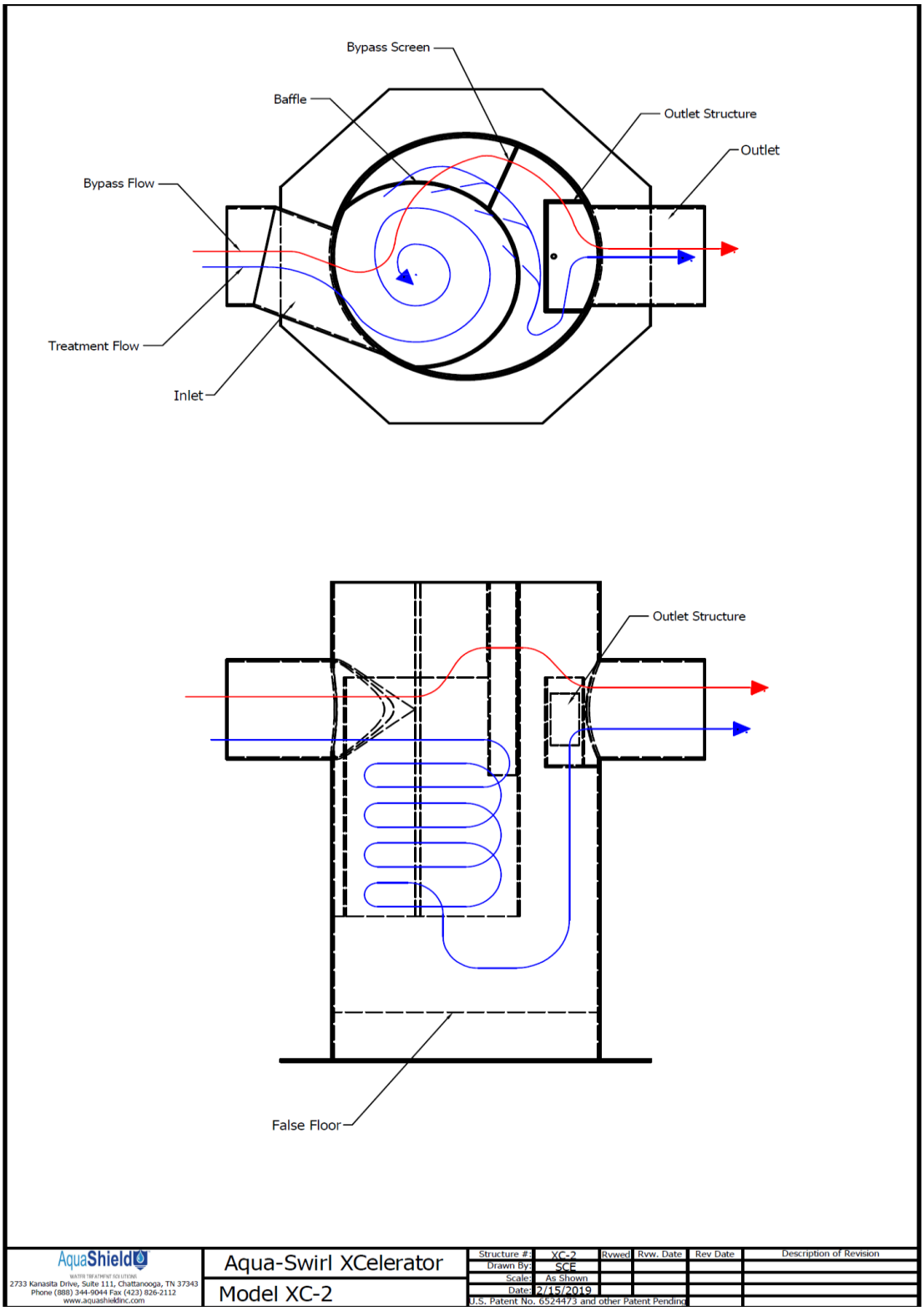

Figure 1 Aqua-Swirl® XCelerator Model XC-2

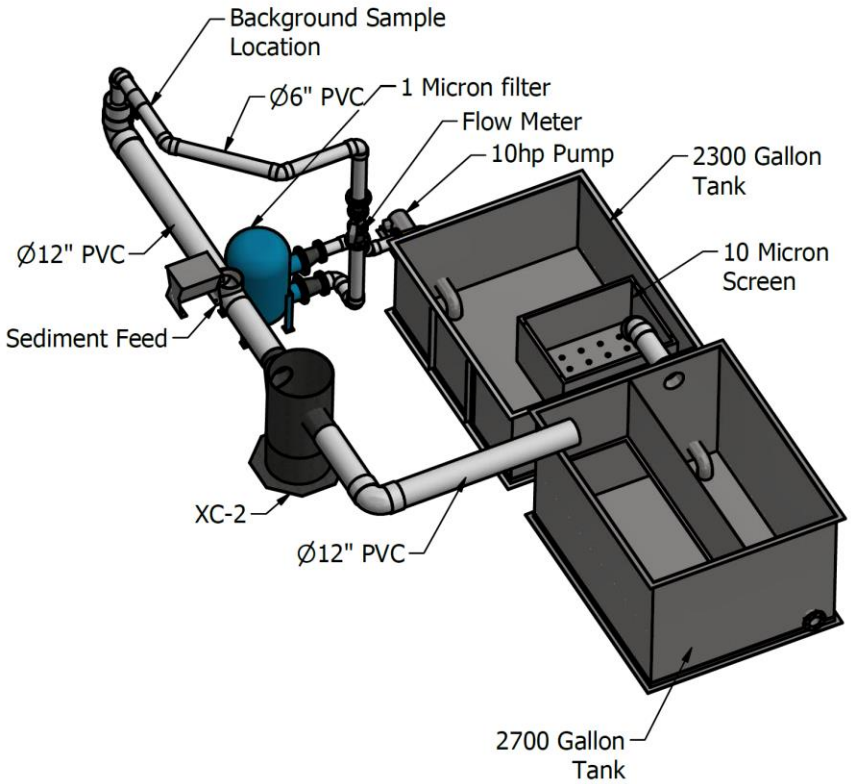

Figure 2 Schematic Illustration of Test Loop Setup, February 2019

A 10-micron (µm) filter screen is positioned within the 2,300-gallon water supply tank to provide for filtration of the coarser fractions of the test sediment that were not captured by the test unit or did not settle in the 2,700-gallon tank. Additional filtration of the test loop water is applied externally and downstream of the 2,300 water supply tank to further reduce the background sediment concentration using a 1.0 µm filter assembly manufactured by Filtra Systems, Model # FSSB-080808CSVR2, Option B.

Water temperature measurements are obtained within the 2,300 water supply tank using a calibrated Lascar EL-USB-TC temperature data logger with Lascar K-type thermocouple probe. The temperature reading is documented to assure an acceptable testing temperature below 80 degrees F.

Test sediment is injected into the crown of the 12 inch diameter influent pipe using an IPM Systems Auger® volumetric screw feeder, model VF-2 with an attached vibrator. The auger screw is driven with a variable speed drive and is calibrated with the test sediment feed prior to testing in order to establish a relationship between screw RPM and feed rate in mg/minute. A calibrated stopwatch is used to establish this relationship. The feeder has a 1.5 cubic foot vibratory hopper to provide a constant supply of dry test sediment. Sediment feed samples are collected in laboratory-supplied clean one liter bottles and weighed to the nearest milligram on a calibrated Tree Model HRB-413 analytical balance manufactured by LW Measurements, LLC.

Influent background samples for the sediment removal efficiency test are collected in clean one liter bottles at the background sample port located upstream of the XC-2 test unit. The inner diameter of this sample port is one inch. This background sample port is purged of water immediately prior to collecting a background sample in order to minimize the potential for any previously accumulated sediment within the sample port assembly to be included in the actual background sample. Effluent water samples are collected in laboratory-prepared, pre-cleaned one liter bottles using a single continuous sweeping grab sampling motion through the effluent discharge as described in Section 5D of the protocol.

Effluent and background sediment concentration samples were independently analyzed according to the protocol by AIRL, Inc. of Cleveland, Tennessee in accordance with ASTM Designation D 3977-97 (Re-approval 2007 2012), "Standard Test Methods for Determining Sediment Concentration in Water Samples."

Total Suspended Solids Removal Efficiency Test Setup

For the total suspended solids (TSS) removal efficiency test runs, sediment was introduced in the flow at a consistent and calibrated rate using the above-cited auger feeder. The designated 100% sediment storage zone of the Aqua-Swirl® XCelerator is 12 inches as measured upward from the base of the unit. In accordance with the protocol, a false floor was positioned 6 inches from the base of the test unit to simulate a 50% full condition. The false floor was secured and sealed around the edges to prevent material from collecting below it. The observer confirmed the placement and dimension of the false floor.

Scour Test Setup

To simulate the 50% full condition for the scour test, a false floor was positioned two inches from the base of the test unit. The false floor was secured and sealed around the edges to prevent material from collecting below it. Four inches of scour test sediment was then added to a level of 6 inches above the base of the test unit. The pre-loaded test sediment was carefully spread to a level layer as measured in multiple locations across the sediment layer. The observer confirmed the false floor placement and dimension as well as the level sediment layer.

2.3 Test Sediment

Test Sediment Feed for Suspended Solids Removal Efficiency Testing

All test sediment used for the suspended solids removal efficiency testing was blended by Good Harbour Laboratories using high purity silica supplied by AGSCO and U.S. Silica. All blending activities took place at the Good Harbour Laboratories facility under the direction of Dr. Gregory Williams. Three random sediment samples were collected from sediment blends and delivered to Maxxam Analytics in Mississauga, Ontario for particle size distribution (PSD) analysis using ASTM D 422-63. The PSD of each of the 3 samples were averaged and reported as the overall PSD (see Figure 4 in Section 4.1). It was determined that the test sediment blends meet the protocol specification. Test sediment was placed in shipping containers, security sealed, and transported to the AquaShield™ laboratory test facility in Chattanooga, Tennessee. All container seals were intact upon receipt and were removed by the independent observer at the initiation of testing.

Note that the XC-2 sediment removal efficiency testing used the same test sediment that was used for the Aqua-Filter™ AF-2.1 NJCAT verification (June 2018). Sediment security was administered by the observer (Southern Environmental Technology) at the conclusion of the AF-2.1 testing program. The observer used for this XC-2 test confirmed that the security seal remained intact at the initiation of the XC-2 testing activities. This test sediment container was also security sealed by the observer at the conclusion of the XC-2 testing program.

Scour Test Sediment

Test sediment used for scour testing was also blended by Good Harbour Laboratories of high purity silica supplied by AGSCO Corporation. Three random sediment samples were collected from the sediment blend and delivered to Maxxam Analytics in Mississauga, Ontario for PSD analysis using ASTM D 422-63. The particle size distribution of each of the 3 samples were averaged and reported as the overall PSD (see Figure 5 in Section 4.3). It was determined that this scour test sediment blend meets the protocol specification. Test sediment was placed in shipping containers, security sealed, and transported to the AquaShield™ laboratory test facility in Chattanooga, Tennessee. The security seals were intact upon receipt and were removed by the observer at the initiation of scour testing.

Note that the XC-2 scour test used the same test sediment as that of scour testing for the Aqua-Swirl® AS-3 NJCAT verification (September 2016). Sediment security was administered by the observer (Dr. Williams) at the conclusion of the AS-3 testing program. The observer used for this XC-2 scour test also confirmed that the security seal remained intact at the initiation of the scour testing activities. This test sediment was also security sealed by the observer at the conclusion of the XC-2 scour testing program.

2 .4 Removal Efficiency Testing Procedure

Removal efficiency testing of the XC-2 was performed in accordance with Section 5 of the NJDEP Laboratory Protocol for HDS MTDs. A total of 5 flow rates were tested: 25%, 50%, 75%, 100% and 125% of the Maximum Treatment Flow Rate (MTFR).

The test sediment mass was fed into the flow stream at a known rate using a screw auger. Sediment was introduced at a rate within 10% of the targeted 200 mg/L influent concentration throughout the duration of the removal efficiency testing process

Six influent sediment feed calibration samples were collected at the injection point. The calibration samples were timed at evenly spaced intervals over the total duration of the test for each tested flow rate and timed such that no collection interval exceeded 1 minute in duration. Each calibration sample was collected in a clean 1-liter container over an interval timed to the nearest second. A factory-calibrated stop watch was used for timing all sediment calibration sampling intervals. These samples were weighed to the nearest milligram using a calibrated Tree® Model HRB-413 electronic balance. This data was used to confirm that the COV of sediment feed rate stayed below the limit of 0.10 as required by the protocol.

The average influent TSS concentration used for calculating removal efficiency was calculated using the total mass of the test sediment added during injection divided by the volume of water that flowed through the test unit during injection (**Equation 1**), as required by the protocol. The

mass extracted for calibration samples was subtracted from the total mass injected to the system when removal efficiency was subsequently calculated. The volume of water for each test was calculated by multiplying the average flow rate by the time of sediment injection only.

$$\textbf{Average Influent Concentration} = \frac{\text{Total mass added}}{\text{Total volume of water flowing through the MTD during addition of test sediment}}$$

Equation 1 Calculation for Average Influent Sediment Concentration

During each flow rate test, the flow meter data logger recorded flow rate once per minute. The Effluent Grab Sampling Method was used per Section 5D of the protocol. Once constant flow rate and test sediment feed were established, three MTD detention times passed before the first effluent sample was collected. All effluent samples were collected in clean, laboratory-provided 1-liter plastic bottles using a continuous sweeping grab sampling motion through the effluent stream as described in Section 5D of the protocol. Samples were then time stamped and placed into a cooler. The observer confirmed that each effluent sample was properly recorded.

The time interval between sequential samples was evenly spaced during the test sediment feed period to obtain 15 samples for each flow rate. Water temperature was recorded at 60 second intervals.

Background samples were collected at the background sample port using a clean, laboratory-provided 1-liter plastic bottle. Influent background samples were collected at the same time as odd numbered effluent grab samples (first, third, fifth, etc.). The collection time for each background sample was recorded. Background samples were time stamped and placed in a cooler. The observer confirmed that each background sample was properly recorded.

A chain of custody form was completed for each test run and samples were transported in a security sealed cooler(s) to the independent laboratory for TSS analysis. All samples were analyzed by AIRL, Inc. of Cleveland, Tennessee in accordance with ASTM D 3977-97 (re-approval 2007) “Standard Test Methods for Determining Sediment Concentrations in Water Samples.”

Background sample data were used in adjusting the effluent samples for background concentration. The XC-2 removal efficiency for each tested flow rate was calculated following **Equation 2**:

$$\textbf{Removal Efficiency (\%)} = \frac{\left(\text{Average Influent Concentration} - \text{Adjusted Average Effluent* Concentration}\right)}{\text{Average Influent Concentration}} \times 100$$

* Adjusted for background concentration

Equation 2. Equation for Calculating Removal Efficiency

2.5 Scour Testing Procedure

In order to simulate the 50% full sediment storage depth, the XC-2 false floor was set to a height of 2 inches above the base of the unit and filled with 4 inches of scour test sediment. The sediment layer was leveled and afterwards the test unit was filled with tap water that same day at a slow rate in an effort to minimize disturbance to the scour test sediment. Scour testing commenced within 96 hours after the unit was pre-loaded with scour test sediment. All scour test setup activities, measurements, testing and sampling were performed in the presence of the independent observer.

Scour testing commenced by ramping up the flow rate to 518.6 gpm (1.16 cfs) which exceeds 200% MTFR. The flow rate was recorded once per minute. Effluent samples were collected and time stamped every 2 minutes after the target flow rate was reached. A total of 15 effluent samples were collected over the duration of the scour test. Effluent samples were collected in clean, laboratory provided plastic 1-liter bottles. Water temperature was recorded every 60 seconds to ensure it did not exceed 80°F during the test run.

Eight background samples were collected at evenly spaced intervals to coincide with the times at which odd-numbered effluent samples were collected as cited in Section 4A of the protocol. Due to the high velocity of the water through the 6-inch pipe occurring at the scour test flow rate, a sufficient volume of water could not be conveyed through the one-inch diameter background sample port to allow for background sediment sampling to be consistent with the TSS removal efficiency testing approach. Using an alternative background sampling approach, background samples were drawn directly from the influent flow pipe through the 12-inch sediment feeder tee. A clean, laboratory provided plastic 1-liter bottle was manually lowered into the flow stream to the base of the 12-inch diameter influent pipe and removed accordingly. Background samples were time stamped accordingly.

A chain of custody form was completed for the scour test samples. All samples were properly recorded and placed in a security sealed cooler for transportation to the independent analytical laboratory. All samples were analyzed by AIRL, Inc. of Cleveland, Tennessee in accordance

with ASTM D3977-97 (re-approval 2007) "Standard Test Methods for Determining Sediment Concentrations in Water Samples."

3. Performance Claims

In keeping with the NJCAT verification process, Aqua-Swirl® XCelerator performance claims are cited below.

Total Suspended Solids Removal Rate

For the particle size distribution and weighted calculation method specified by the NJDEP HDS MTD protocol, the Aqua-Swirl® XCelerator Model XC-2 will demonstrate at least 50% TSS removal efficiency at an MTFR of 0.57 cfs (258 gpm).

Maximum Treatment Flow Rate

The MTFR for the Aqua-Swirl® XCelerator Model XC-2 was demonstrated to be 258 gpm (0.57 cfs) which corresponds to a surface area loading rate of 52.5 gpm/ft^2.

Sediment Storage Depth and Volume

The maximum sediment storage depth of the Aqua-Swirl® XCelerator is 12 inches. Available sediment storage volume varies with each Aqua-Swirl® XCelerator model, as model dimensions increase in diameter. A sediment storage depth of 6 inches corresponds to 50% full sediment storage capacity.

Effective Treatment Area

The effective treatment area of Aqua-Swirl® XCelerator models vary with model size, as it corresponds to the surface area of the model diameter. The tested XC-2 has an effective treatment area of 4.91 ft^2.

Detention Time and Volume

The detention time of an Aqua-Swirl® XCelerator depends on flow rate and model size. The detention time is calculated by dividing the treatment volume by the flow rate. The treatment volume is defined as the surface area multiplied by the depth between the pipe inverts (which are at the same elevation) and the top of the sediment storage zone. The tested XC-2 has a detention time of 23 seconds at the MTFR of 0.57 cfs.

Online or Offline

Based on the results of the scour test as described in Section 4.4, the Aqua-Swirl® XCelerator qualifies for online installation.

4. Supporting Documentation

The NJDEP Procedure (NJDEP, 2013a) for obtaining verification of an MTD from NJCAT requires that copies of the laboratory test reports, including all collected and measured data, all data from performance test runs, all pertinent calculations, etc. be included in this section. It is the understanding of AquaShield™ that this was discussed with NJDEP and it was agreed that as long as such documentation could be made available by NJCAT upon request that it would not be necessary to include all such supporting documentation in verification reports. AquaShield™ has provided this documentation to NJCAT.

4.1 Test Sediment PSD Analysis – Removal Efficiency Testing

AquaShield™ retained the services of Good Harbour Laboratories to prepare removal efficiency test sediment using high quality silica. Refer to Section 2.3 of this report for a discussion of the origin of this test sediment. The PSD results and the comparison to the protocol specification are shown in **Table 1**. **Figure 3** illustrates the comparison of the NJDEP PSD specification to the average PSDs for XC-2 test sediment.

Table 1 Particle Size Distribution of Removal Efficiency Test Sediment

Particle Size (Microns)	Test Sediment Particle Size (% Less Than)[1]				NJDEP Specification[2]	QA/QC
	Sample 1	Sample 2	Sample 3	Average		
1000	100	100	100	100	100	PASS
500	94	94	94	94	95	PASS
250	89	89	89	89	90	PASS
150	82	81	81	81	75	PASS
100	62	61	61	61	60	PASS
75	54	52	52	53	50	PASS
50	46	45	44	45	45	PASS
20	38	37	36	37	35	PASS
8	20	19	20	20	20	PASS
5	14	13	12	13	10	PASS
2	6	8	5	6	5	PASS
d_{50}	62 µm	67 µm	68 µm	66 µm	≤ 75 µm	PASS

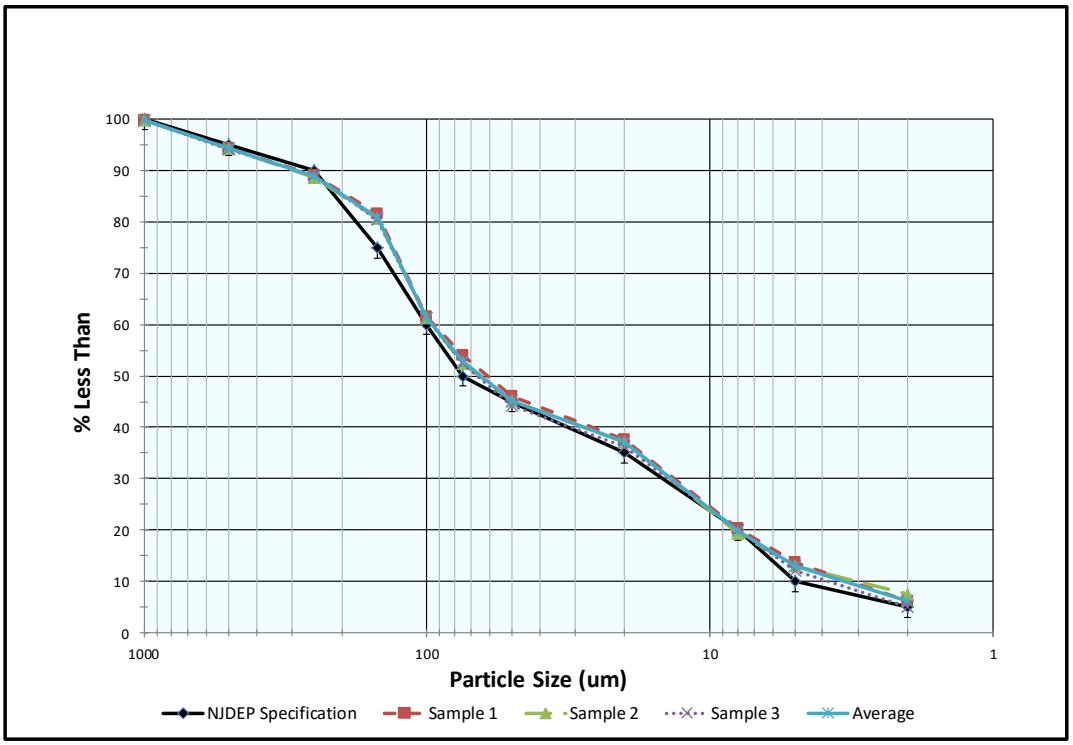

Figure 3 Average Removal Efficiency Test Sediment PSD vs. Protocol Specification

4.2 Removal Efficiency Testing

In accordance with the NJDEP HDS MTD Protocol, sediment removal efficiency testing was conducted on the Aqua-Swirl® XCelerator Model XC-2 unit in order to establish the ability of the device to remove the specified test sediment at 25%, 50%, 75%, 100% and 125% of the target MTFR with the goal to demonstrate at least 50% annualized weighted sediment removal as defined in the protocol. The target MTFR was 258 gpm (0.57 cfs).

All results reported in this section were obtained from test runs that comply with the protocol. None of the sediment calibration samples exceeded one minute for any of the tests. The inlet feed concentration coefficient of variance (COV) did not exceed 0.10 for any test flow rate. The average influent sediment concentration was calculated using **Equation 1** from Section 2.4 herein. The average effluent sediment concentration was adjusted by subtracting the measured background concentrations. No background TSS concentration exceeded the 20 mg/L maximum allowed by the protocol. Water temperature did not exceed 80° F during any of the test runs. Also note that background sample concentrations listed as 2 mg/L represent one half of the method detection limit of 4 mg/L (reported by the laboratory as <4 mg/L).

25% MTFR Results

The 25% MTFR test was conducted in accordance with the NJDEP HDS MTD protocol at a target flow rate of 64 gpm (0.14 cfs). A summary of test readings, measurements and calculations are shown in **Table 2**. Feed calibration results are shown in **Table 3**. Background and effluent sampling measurements are shown in **Table 4**.

The XC-2 removed 63.9% of the test sediment at an average flow rate of 64 gpm (0.14 cfs). **Table 5** shows that the QA/QC results for flow rate, feed rate, influent concentration and background concentration are compliant with the protocol.

Table 2 Summary of XC-2 25% MTFR Test

Test Date	Target Flow (cfs/gpm)	Detention Time (sec)	Target Sediment Concentration (mg/L)	Target Feed Rate (mg/min)	Test Duration (min:sec)
2/22/19	0.14/64.0	91	200	48,784	33:50
Measured Values					
Avg. Flow Rate (cfs/gpm)	**Avg. Influent Conc. (mg/L)**	**Max. Water Temp. (°F)**	**Avg. Adjusted Effluent Conc. (mg/L)**	**Avg. Removal Efficiency (%)**	**QA/QC Compliance**
0.14/64.0	201.5	58	72.7	63.9	Yes

Table 3 XC-2 25% MTFR Sediment Feed Results

Target Concentration	200 mg/L	Target Feed Rate		48,784 mg/min
Sample ID	**Sample Time (min:sec)**	**Sample Mass (gm)**	**Sample Duration (sec)**	**Feed Rate (mg/min)**
Feed Rate 1	0.:00	47.772	60	47,772
Feed Rate 2	6:34	51.269	60	51,269
Feed Rate 3	13:08	48.597	60	48,597
Feed Rate 4	19:42	48.348	60	48,348
Feed Rate 5	26:16	47.721	60	47,721
Feed Rate 6	32:50	55.402	60	55,402

Table 4 XC-2 25% MTFR Background and Effluent Measurements

Sample ID	Time (min:sec)	Concentration (mg/L)*		
Background 1	5:34	2		
Background 2	6:34	2		
Background 3	12:38	2		
Background 4	18:42	2		
Background 5	19:42	2		
Background 6	25:46	2		
Background 7	31:50	2		
Background 8	32:50	2		
Sample ID	**Time (min:sec)**	**Concentration (mg/L)**	**Associated Background Concentration (mg/L)**	**Adjusted Concentration (mg/L)**
Effluent 1	5:34	70	2	68
Effluent 2	6:04	74	2	72
Effluent 3	6:34	73	2	71
Effluent 4	12:08	72	2	70
Effluent 5	12:38	69	2	67
Effluent 6	13:08	70	2	68
Effluent 7	18:42	74	2	72
Effluent 8	19:12	74	2	72
Effluent 9	19:42	75	2	73
Effluent 10	25:16	76	2	74
Effluent 11	25:46	78	2	76
Effluent 12	26:16	79	2	77
Effluent 13	31:50	77	2	75
Effluent 14	32:20	78	2	76
Effluent 15	32:50	81	2	79
	Average	74.7	2.0	72.7

* Background concentrations listed as 2 mg/L represent one half of the method detection limit of <4 mg/L as reported by the laboratory.

Table 5 XC-2 25% MTFR QA/QC Results

Flow Rate			
Target (cfs/gpm)	Average (cfs/gpm)	Coef. Of Variance	Acceptable Parameters COV
0.14/64	0.14/64.0	0.004	<0.03
Feed Rate			
Target (mg/min)	Average (mg/min)	Coef. Of Variance	Acceptable Parameters COV
48,784	49,852	0.061	<0.1
Influent Concentration			
Target (mg/L)	Average (mg/L)	Coef. Of Variance	Acceptable Parameters COV
200	201.5	0.061	<0.1
Background Concentration			
Low (mg/L)	High (mg/L)	Average (mg/L)	Acceptable Threshold (mg/L)
2	2	2.0	<20

50% MTFR Results

The 50% MTFR test of the XC-2 was conducted in accordance with the NJDEP HDS MTD protocol at a target flow rate of 129 gpm (0.29) cfs. A summary of test readings, measurements and calculations are shown in **Table 6**. Feed calibration results are shown in **Table 7**. Background and effluent sampling measurements are shown in **Table 8**.

The XC-2 removed 54.1% of the test sediment at an average flow rate of 128.4 (0.29 cfs). **Table 9** shows that the QA/QC results for flow rate, feed rate, influent concentration and background concentration are compliant with the protocol.

Table 6 Summary of XC-2 50% MTFR Test

Test Date	Target Flow (cfs/gpm)	Detention Time (sec)	Target Sediment Concentration (mg/L)	Target Feed Rate (mg/min)	Test Duration (min:sec)
2/21/19	0.29/129	46	200	97,568	22:25
Measured Values					
Avg. Flow Rate (cfs/gpm)	**Avg. Influent Conc. (mg/L)**	**Max. Water Temp. (°F)**	**Avg. Adjusted Effluent Conc. (mg/L)**	**Avg. Removal Efficiency (%)**	**QA/QC Compliance**
0.29/128.4	195.7	57.5	89.8	54.1	Yes

Table 7 XC-2 50% MTFR Sediment Feed Results

Target Concentration	200 mg/L	Target Feed Rate		97,568 mg/min
Sample ID	**Sample Time (min:sec)**	**Sample Mass (gm)**	**Sample Duration (sec)**	**Feed Rate (mg/min)**
Feed Rate 1	0:00	95.939	60	95,939
Feed Rate 2	4:17	94.088	60	94,088
Feed Rate 3	8:34	93.888	60	93,888
Feed Rate 4	12:51	97.144	60	97,144
Feed Rate 5	17:08	94.762	60	94,762
Feed Rate 6	21:25	96.763	60	96,763

Table 8 XC-2 50% MTFR Background and Effluent Measurements

Sample ID	Time (min:sec)	Concentration (mg/L)*		
Background 1	3:17	2		
Background 2	4:17	2		
Background 3	8:04	2		
Background 4	11:51	4		
Background 5	12:51	2		
Background 6	16:38	2		
Background 7	20:25	4		
Background 8	21:25	5		
Sample ID	**Time (min:sec)**	**Concentration (mg/L)**	**Associated Background Concentration (mg/L)**	**Adjusted Concentration (mg/L)**
Effluent 1	3:17	88	2	86
Effluent 2	3:47	90	2	88
Effluent 3	4:17	90	2	88
Effluent 4	7:34	90	2	88
Effluent 5	8:04	94	2	92
Effluent 6	8:34	95	3	92
Effluent 7	11:51	91	4	87
Effluent 8	12:21	97	3	94
Effluent 9	12:51	94	2	92
Effluent 10	16:08	93	2	91
Effluent 11	16:38	94	2	92
Effluent 12	17:08	91	3	88
Effluent 13	20:25	91	4	87
Effluent 14	20:55	98	4.5	93.5
Effluent 15	21:25	93	5	88
	Average	92.6	2.8	89.8

* Background concentrations listed as 2 mg/L represent one half of the method detection limit of <4 mg/L as reported by the laboratory.

Table 9 XC-2 50% MTFR QA/QC Results

Flow Rate			
Target (cfs/gpm)	Average (cfs/gpm)	Coef. Of Variance	Acceptable Parameters COV
0.29/129	0.29/128.4	0.009	<0.03
Feed Rate			
Target (mg/min)	Average (mg/min)	Coef. Of Variance	Acceptable Parameters COV
97,568	95,431	0.015	<0.1
Influent Concentration			
Target (mg/L)	Average (mg/L)	Coef. Of Variance	Acceptable Parameters COV
200	195.7	0.015	<0.1
Background Concentration			
Low (mg/L)	High (mg/L)	Average (mg/L)	Acceptable Threshold (mg/L)
2	5	2.8	<20

75% MTFR Results

The 75% MTFR test of the XC-2 was conducted in accordance with the NJDEP HDS MTD protocol at a target flow rate of 193 (0.43 cfs). A summary of test readings, measurements and calculations are shown in **Table 10**. Feed calibration results are shown in **Table 11**. Background and effluent sampling measurements are shown in **Table 12**.

The XC-2 removed 49.7% of the test sediment at an average flow rate of 192.8 gpm (0.43 cfs). **Table 13** shows that the QA/QC results for flow rate, feed rate, influent concentration and background concentration are compliant with the protocol.

Table 10 Summary of XC-2 75% MTFR Test

Test Date	Target Flow (cfs/gpm)	Detention Time (sec)	Target Sediment Concentration (mg/L)	Target Feed Rate (mg/min)	Test Duration (min:sec)
2/20/19	0.43/193	30	200	146,352	16:37
Measured Values					
Avg. Flow Rate (cfs/gpm)	**Avg. Influent Conc. (mg/L)**	**Max. Water Temp. (°F)**	**Avg. Adjusted Effluent Conc. (mg/L)**	**Avg. Removal Efficiency (%)**	**QA/QC Compliance**
0.43/192.8	202.8	56.5	102.0	49.7	Yes

Table 11 XC-2 75% MTFR Sediment Feed Results

Target Concentration	200 mg/L	Target Feed Rate		146,352 mg/min
Sample ID	**Sample Time (min:sec)**	**Sample Mass (gm)**	**Sample Duration (sec)**	**Feed Rate (mg/min)**
Feed Rate 1	0:00	98.231	40	147,347
Feed Rate 2	3:12	96.341	40	144,512
Feed Rate 3	6:23	99.586	40	149,379
Feed Rate 4	9:34	96.177	40	144,266
Feed Rate 5	12:45	97.531	40	146,297
Feed Rate 6	15:57	96.446	40	144,669

Table 12 XC-2 75% MTFR Background and Effluent Measurements

Sample ID	Time (min:sec)	Concentration (mg/L)*		
Background 1	2:12	2		
Background 2	3:12	2		
Background 3	5:53	4		
Background 4	8:34	4		
Background 5	9:34	5		
Background 6	12:15	5		
Background 7	14:57	6		
Background 8	15:57	7		
Sample ID	**Time (min:sec)**	**Concentration (mg/L)**	**Associated Background Concentration (mg/L)**	**Adjusted Concentration (mg/L)**
Effluent 1	2:12	95	2	93
Effluent 2	2:42	106	2	104
Effluent 3	3:12	114	2	112
Effluent 4	5:23	99	3	96
Effluent 5	5:53	107	4	103
Effluent 6	6:23	104	4	100
Effluent 7	8:34	107	4	103
Effluent 8	9:04	100	4.5	95.5
Effluent 9	9:34	112	5	107
Effluent 10	11:45	101	5	96
Effluent 11	12:15	117	5	112
Effluent 12	12:45	104	5.5	98.5
Effluent 13	14:57	106	6	100
Effluent 14	15:57	107	6.5	100.5
Effluent 15	16:37	116	7	109
	Average	106.3	4.4	102.0

* Background concentrations listed as 2 mg/L represent one half of the method detection limit of <4 mg/L as reported by the laboratory.

Table 13 XC-2 75% MTFR QA/QC Results

Flow Rate			
Target (cfs/gpm)	Average (cfs/gpm)	Coef. Of Variance	Acceptable Parameters COV
0.43/193	0.43/192.8	0.006	<0.03
Feed Rate			
Target (mg/min)	Average (mg/min)	Coef. Of Variance	Acceptable Parameters COV
146,352	146,078	0.014	<0.1
Influent Concentration			
Target (mg/L)	Average (mg/L)	Coef. Of Variance	Acceptable Parameters COV
200	202.8	0.014	<0.1
Background Concentration			
Low (mg/L)	High (mg/L)	Average (mg/L)	Acceptable Threshold (mg/L)
2	7	4.4	<20

100% MTFR Results

The 100% MTFR test of the XC-2 was conducted in accordance with the NJDEP HDS MTD protocol at a target flow rate of 258 gpm (0.57 cfs). A summary of test readings, measurements and calculations are shown in **Table 14**. Feed calibration results are shown in **Table 15**. Background and effluent sampling measurements are shown in **Table 16**.

The XC-2 removed 35.7% of the test sediment at an average flow rate of 255.9 gpm (0.57 cfs). **Table 17** shows that the QA/QC results for flow rate, feed rate, influent concentration and background concentration are compliant with the protocol.

Table 14 Summary of XC-2 100% MTFR Test

Test Date	Target Flow (cfs/gpm)	Detention Time (sec)	Target Sediment Concentration (mg/L)	Target Feed Rate (mg/min)	Test Duration (min:sec)
2/19/19	0.57/258	23	200	195,136	13:43
Measured Values					
Avg. Flow Rate (cfs/gpm)	**Avg. Influent Conc. (mg/L)**	**Max. Water Temp. (°F)**	**Avg. Adjusted Effluent Conc. (mg/L)**	**Avg. Removal Efficiency (%)**	**QA/QC Compliance**
0.57/255.9	205.4	57	132.1	35.7	Yes

Table 15 XC-2 100% MTFR Sediment Feed Results

Target Concentration	200 mg/L	Target Feed Rate		195,136 mg/min
Sample ID	**Sample Time (min:sec)**	**Sample Mass (gm)**	**Sample Duration (sec)**	**Feed Rate (mg/min)**
Feed Rate 1	0:00	101.104	30	202,208
Feed Rate 2	2:39	101.074	30	202,148
Feed Rate 3	5:17	97.800	30	195,600
Feed Rate 4	7:56	96.041	30	192,082
Feed Rate 5	10:34	98.295	30	196,590
Feed Rate 6	13:13	97.565	30	195,130

Table 16 XC-2 100% MTFR Background and Effluent Measurements

Sample ID	Time (min:sec)	Concentration (mg/L)		
Background 1	1:39	8		
Background 2	2:39	8		
Background 3	4:47	8		
Background 4	6:56	7		
Background 5	7:56	7		
Background 6	10:04	9		
Background 7	12:13	11		
Background 8	13:13	17		
Sample ID	**Time (min:sec)**	**Concentration (mg/L)**	**Associated Background Concentration (mg/L)**	**Adjusted Concentration (mg/L)**
Effluent 1	1:39	135	8	127
Effluent 2	2:09	152	8	144
Effluent 3	2:39	141	8	133
Effluent 4	4:17	126	8	118
Effluent 5	4:47	139	8	131
Effluent 6	5:17	149	7.5	141.5
Effluent 7	6:56	134	7	127
Effluent 8	7:26	147	7	140
Effluent 9	7:56	154	7	147
Effluent 10	9:34	122	8	114
Effluent 11	10:04	140	9	131
Effluent 12	10:34	143	10	133
Effluent 13	12:13	141	11	130
Effluent 14	12:43	143	14	129
Effluent 15	13:13	153	17	136
	Average	141.3	9.2	132.1

Table 17 XC-2 100% MTFR QA/QC Results

Flow Rate			
Target (cfs/gpm)	Average (cfs/gpm)	Coef. Of Variance	Acceptable Parameters COV
0.57/258	0.57/255.9	0.004	<0.03
Feed Rate			
Target (mg/min)	Average (mg/min)	Coef. Of Variance	Acceptable Parameters COV
195,136	197,293	0.021	<0.1
Influent Concentration			
Target (mg/L)	Average (mg/L)	Coef. Of Variance	Acceptable Parameters COV
200	205.4	0.021	<0.1
Background Concentration			
Low (mg/L)	High (mg/L)	Average (mg/L)	Acceptable Threshold (mg/L)
7	17	9.375	<20

125% MTFR Results

The 125% MTFR test of the XC-2 was conducted in accordance with the NJDEP HDS MTD protocol at a target flow rate of 322 gpm (0.72 cfs). A summary of test readings, measurements and calculations are shown in **Table 18**. Feed calibration results are shown in **Table 19**. Background and effluent sampling measurements are shown in **Table 20**.

The XC-2 removed 31.7% of the test sediment at an average flow rate of 322.3 gpm (0.72 cfs). **Table 21** shows that the QA/QC results for flow rate, feed rate, influent concentration and background concentration are compliant with the protocol.

Table 18 Summary of XC-2 125% MTFR Test

Test Date	Target Flow (cfs/gpm)	Detention Time (sec)	Target Sediment Concentration (mg/L)	Target Feed Rate (mg/min)	Test Duration (min:sec)
2/18/19	0.72/322	18	200	243,920	12:04
Measured Values					
Avg. Flow Rate (cfs/gpm)	**Avg. Influent Conc. (mg/L)**	**Max. Water Temp. (°F)**	**Avg. Adjusted Effluent Conc. (mg/L)**	**Avg. Removal Efficiency (%)**	**QA/QC Compliance**
0.72/322.3	187.5	57	128.0	31.7	Yes

Table 19 XC-2 125% MTFR Sediment Feed Results

Target Concentration	200 mg/L	Target Feed Rate		243,920 mg/min
Sample ID	**Sample Time (min:sec)**	**Sample Mass (gm)**	**Sample Duration (sec)**	**Feed Rate (mg/min)**
Feed Rate 1	0:00	92.087	25	221,009
Feed Rate 2	2:20	107.923	25	259,015
Feed Rate 3	4:40	94.336	25	226,406
Feed Rate 4	7:00	96.466	25	231,518
Feed Rate 5	9:20	97.185	25	233,244
Feed Rate 6	11:39	94.166	25	225,998

Table 20 XC-2 125% MTFR Background and Effluent Measurements

Sample ID	Time (min:sec)	Concentration (mg/L)*		
Background 1	1:20	2		
Background 2	2:20	2		
Background 3	4:10	2		
Background 4	6:00	2		
Background 5	7:00	2		
Background 6	8:50	2		
Background 7	10:39	2		
Background 8	11:39	2		
Sample ID	**Time (min:sec)**	**Concentration (mg/L)**	**Associated Background Concentration (mg/L)**	**Adjusted Concentration (mg/L)**
Effluent 1	1:20	110	2	108
Effluent 2	1:50	133	2	131
Effluent 3	2:20	133	2	131
Effluent 4	3:40	118	2	116
Effluent 5	4:10	116	2	114
Effluent 6	4:40	131	2	129
Effluent 7	6:00	117	2	115
Effluent 8	6:30	151	2	149
Effluent 9	7:00	132	2	130
Effluent 10	8:20	112	2	110
Effluent 11	8:50	134	2	132
Effluent 12	9:20	152	2	150
Effluent 13	10:39	124	2	122
Effluent 14	11:09	148	2	146
Effluent 15	11:39	139	2	137
	Average	130.0	2.0	128.0

* Background concentrations listed as 2 mg/L represent one half of the method detection limit of <4 mg/L as reported by the laboratory.

Table 21 XC-2 125% MTFR QA/QC Results

Flow Rate			
Target (cfs/gpm)	Average (cfs/gpm)	Coef. Of Variance	Acceptable Parameters COV
0.72/322	0.72/322.3	0.005	<0.03
Feed Rate			
Target (mg/min)	Average (mg/min)	Coef. Of Variance	Acceptable Parameters COV
243,920	232,865	0.058	<0.1
Influent Concentration			
Target (mg/L)	Average (mg/L)	Coef. Of Variance	Acceptable Parameters COV
200	187.5	0.058	<0.1
Background Concentration			
Low (mg/L)	High (mg/L)	Average (mg/L)	Acceptable Threshold (mg/L)
2	2	2.0	<20

Excluded Data/Results

No data or test results have been excluded from the sediment removal efficiency testing.

Annualized Weighted TSS Removal Efficiency

The annualized weighted TSS removal efficiency calculation is shown below in **Table 22** based on the results of the removal efficiency testing.

Testing in accordance with the provisions detailed in the NJDEP HDS MTD Protocol demonstrate that the Aqua-Swirl® XCelerator Model XC-2 achieved a 50.7% annualized weighted TSS removal at an MTFR of 0.57 cfs (52.5 gpm/ft^2). This testing demonstrates that the Aqua-Swirl® XCelerator Model XC-2 meets the NJDEP requirement that HDS devices demonstrate at least 50% weighted annualized TSS removal efficiency at the MTFR.

Table 22 Annualized Weighted TSS Removal of the XC-2

% MTFR	Average Flow Rate Tested (cfs)	Actual % MTFR	Measured Removal Efficiency	Annual Weighting Factor	Weighted Removal Efficiency
25%	0.14	24.6%	63.9	0.25	16.0
50%	0.29	50.9%	54.1	0.30	16.2
75%	0.43	75.4%	49.7	0.20	9.9
100%	0.57	100%	35.7	0.15	5.4
125%	0.72	126.3%	31.7	0.10	3.2
Weighted Annualized TSS Removal Efficiency					**50.7**

4.3 Test Sediment PSD Analysis – Scour Testing

Also refer to Section 2.3 of this report for a discussion of the origin of the scour test sediment. Test sediment used for scour testing was independently blended by Good Harbour Laboratories of high purity silica supplied by AGSCO Corporation. Three representative sediment samples were collected from the sediment blend and delivered to Maxxam Analytics in Mississauga, Ontario for independent PSD analysis using ASTM D 422-63. The particle size distribution of each of the 3 samples were averaged and reported as the overall particle size distribution. It was determined that this test sediment blend meets the protocol specification. The test sediment was placed in shipping containers, sealed, and transported to the AquaShield™ laboratory test facility in Chattanooga, Tennessee. The container seals were intact upon receipt and were removed by the independent observer at the initiation of the prior Aqua-Swirl® AS-3 scour testing program. At the conclusion of the AS-3 testing program, the observer again sealed the test sediment container. The observer for this XC-2 scour test confirmed that the security seal had remained intact since completion of the AS-3 testing and re-opened the container for the XC-2 scour test. The results and the comparison to the protocol specification are shown in **Table 23** and **Figure 4**. This test sediment was determined to be overall finer than the specified scour test sediment.

Table 23 Scour Test Sediment PSD

Particle Size (µm)	Test Sediment Particle Size (% passing)				NJDEP Minimum Specification	QA/QC
	Sample 1	Sample 2	Sample 3	Average		
1,000	100	100	100	100	98	PASS
500	98	97	97	97	88	PASS
250	70	67	64	67	53	PASS
150	59	56	52	56	38	PASS
100	44	42	38	41	23	PASS
75	28	24	23	25	8	PASS
50	10	9	11	10	0	PASS

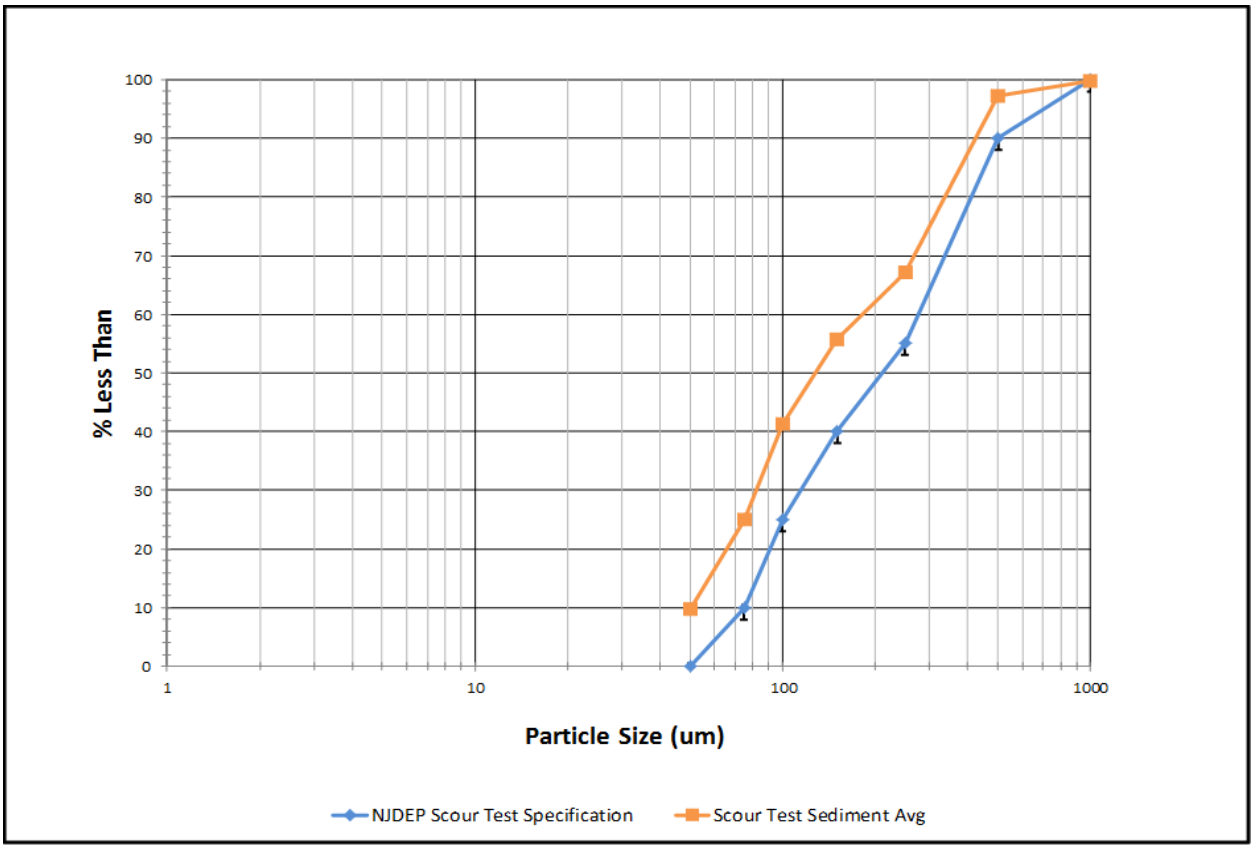

Figure 4 Scour Test Sediment PSD vs. Protocol Specification

4.4 Scour Testing for Online Installation

Scour testing for the Aqua-Swirl® XCelerator Model XC-2 was conducted in accordance with Section 4 of the NJDEP HDS protocol. A target scour test flow rate was 516 gpm (1.15 cfs). An average scour test flow rate of 518.6 gpm (1.16 cfs) was used in order to establish its capability to be installed in an online configuration. Based on an MTFR of 258 gpm (0.57 cfs), the scour test flow rate represents 201% of the MTFR. The flow rate COV was 0.001. Flow and background concentrations are shown in **Table 24**.

Table 24 Flow and Background Concentration Results for XC-2 Scour Testing

Date	March 7, 2019		**Average Flow Rate =**	518.6 gpm
Maximum Temperature	55.5		**Flow Rate COV =**	0.001
Sample ID	**Time (min:sec)**	**Concentration (mg/L)**		
Background 1	2:00	9		
Background 2	4:00	8.5		
Background 3	6:00	8		
Background 4	8:00	8.5		
Background 5	10:00	9		
Background 6	12:00	9		
Background 7	14:00	9		
Background 8	16:00	9.5		
Background 9	18:00	10		
Background 10	20:00	11		
Background 11	22:00	12		
Background 12	24:00	12.5		
Background 13	26:00	13		
Background 14	28:00	14.5		
Background 15	30:00	16		

Unadjusted effluent sediment concentrations (inclusive of background concentrations) ranged from 19 to 42 mg/L. When adjusted for background concentrations, effluent concentrations ranged from 10 to 31 mg/L and averaged 17.1 mg/L. **Table 25** summarizes effluent, background and adjusted effluent sediment concentrations.

Based on the results of this scour test, the Aqua-Swirl® XCelerator can be installed online.

Excluded Data/Results

No data or results were excluded for the scour test.

Table 25 Effluent Concentration Results for XC-2 Scour Testing

Sample ID	Time (min:sec)	Effluent Concentration with Background Concentration (mg/L)	Background Concentration (mg/L)	Adjusted Effluent Concentration (mg/L)
S-1	2:00	19	9	10
S-2	4:00	19	8.5	10.5
S-3	6:00	30	8	22
S-4	8:00	22	8.5	13.5
S-5	10:00	19	9	10
S-6	12:00	22	9	13
S-7	14:00	37	9	28
S-8	16:00	27	9.5	17.5
S-9	18:00	30	10	20
S-10	20:00	42	11	31
S-11	22:00	27	12	15
S-12	24:00	26	12.5	13.5
S-13	26:00	34	13	21
S-14	28:00	32	14.5	17.5
S-15	30:00	30	16	14
			Average	**17.1**

5. Design Limitations

The Aqua-Swirl® XCelerator is an engineered system designed to meet site-specific installation requirements. General terms of design parameters and limitations are cited below.

Soil Characteristics

The Aqua-Swirl® XCelerator is a post-construction, flow-through modular device. AquaShield™ specifies that stone backfill material be used. Site-specific native soils can be used as backfill provided that the material substantially conforms to the backfill specification. AquaShield™ engineers can assist contractors with backfill information when using native soil.

Slope of Drainage Pipe

There is no specific drainage pipe slope limitation. Given that both the inlet and outlet pipe elevations are identical, the site design should consider piping configurations to accommodate the level flow-through piping design. AquaShield™ engineers can work with site designers to facilitate an appropriate conveyance configuration.

Maximum Water Quality Treatment Flow Rate

The maximum water quality treatment flow rate varies by Aqua-Swirl® XCelerator model size and should be taken into consideration for site designs. AquaShield™ engineers can assist site designers with managing peak flow rates.

Maintenance Requirements

Aqua-Swirl® XCelerator stormwater systems should be inspected and maintained following the recommendations and guidelines included in the Aqua-Swirl® XCelerator Inspection and Maintenance Manual available at: https://tinyurl.com/Aqua-Swirl-NJDEP-IM. Section 6 herein includes additional maintenance information.

Driving Head

Aqua-Swirl® XCelerator technology does not require a driving head beyond that required to achieve flow conveyance and operating conditions.

Installation Limitations

Pick weights vary by Aqua-Swirl® XCelerator model size. AquaShield™ can provide contractors with model-specific pick weights prior to delivery.

Configurations

Aqua-Swirl® XCelerator technology is based on the tangential inlet to set up the vortex-flow separation. Both offline and online configurations can accommodate clockwise and counter clockwise flow processes.

Loading

Aqua-Swirl® systems are designed for HS-25 or greater loading. Contact AquaShield™ engineering staff when heavier loading conditions are anticipated.

Pre-treatment Requirements

The Aqua-Swirl® XCelerator has no pre-treatment requirements.

Depth to Seasonal High Water Table

Aqua-Swirl® XCelerator performance is independent of high groundwater conditions. AquaShield™ performs buoyancy calculations as warranted for system installations to ensure long term functionality. Anti-floatation controls can be added for system installations when necessary.

6. Maintenance Plan

The Aqua-Swirl® XCelerator Inspection and Maintenance Manual provided at installation is available at: https://tinyurl.com/Aqua-Swirl-NJDEP-IM.

The Aqua-Swirl® XCelerator is designed to remove suspended sediment, debris, floatables and free-floating oil from stormwater runoff using a single chamber for both treatment and pollutant storage. As with any post-construction water quality treatment device, periodic removal of captured materials is essential to ensure long term functionality. Aqua-Swirl® XCelerator performance may be diminished when sediment and/or oil storage capacities are reached. An Aqua-Swirl® XCelerator Inspection and Maintenance manual is provided for each site delivery to track and document system operations.

Both inspection and maintenance activities of the Aqua-Swirl® XCelerator are accomplished from the surface. There are no moving parts, no internal components that need replacement, and no product-specific tools are needed from AquaShield™. A typical maintenance event for the cleaning of the swirl chamber utilizes a vacuum truck. Aqua-Swirl® XCelerator units include one or two manholes depending on model size to facilitate inspection and maintenance events.

Inspection

Upon installation and during construction activities, AquaShield™ recommends that an Aqua-Swirl® XCelerator be inspected quarterly for the first year of operation to develop an appropriate schedule of maintenance. Essential elements of a facility inspection include observing floating materials and measuring the accumulated sediment at the base of the swirl chamber. The Aqua-Swirl® XCelerator should be inspected and cleaned at the end of construction regardless of whether it has reached its sediment storage capacity and/or other captured materials. During the first year post-construction, the facility should again be inspected quarterly and cleaned as needed depending on site conditions. The ultimate inspection frequency will be determined by site-specific runoff conditions. AquaShield™ recommends a minimum facility inspection frequency of once per year post-construction. Offline installations should also consider the inspection and cleaning of external conveyance structures to ensure proper operation of the facility as a whole.

AquaShield™ recommends that the units be cleaned when sediment depth reaches 6 inches, representing 50% sediment storage capacity. The full sediment storage depth in the Aqua-Swirl® XCelerator is 12 inches.

Maintenance

Cleanout frequency will ultimately be determined by post-installation and post-construction runoff conditions. As a general rule, AquaShield™ recommends that Aqua-Swirl® XCelerator systems be maintained at a minimum of once per year. There is no need to enter an Aqua-Swirl® XCelerator chamber for inspections or maintenance activities. Confined space entry techniques are recommended should entry to the device be necessary based on site circumstances.

Cleaning is performed by a vacuum truck from the surface but it may be warranted to remove gross debris and floatable objects by an alternate suitable means (i.e., skimming pole with net). Any accumulated oil can be vacuumed from the surface. Accumulated sediment at the base of

the swirl chamber can be removed via vacuum through the manhole(s) opening from the surface. There are no hidden or blind access chambers in the Aqua-Swirl® XCelerator which allows for a complete cleaning of the unit.

The manhole lid(s) should be replaced at the conclusion of inspection and maintenance activities. AquaShield™ advises that all removed pollutants be disposed in accordance with all applicable local regulations and ordinances.

7. Statements

The following signed statements from the manufacturer, third party observer and NJCAT are required to complete the NJCAT verification process. Additionally, this report has been subjected to public review and all comments and concerns have been satisfactorily addressed.

March 19, 2019

Dr. Richard Magee, Sc.D., P.E., BCEE
Executive Director
New Jersey Corporation for Advanced Technology
Center for Environmental Systems
Stevens Institute of Technology
One Castle Point on Hudson
Hoboken, NJ 07030

Re: Verification of Aqua-Swirl® XCelerator Stormwater Treatment System to NJDEP Laboratory Testing Protocol for a Hydrodynamic Sedimentation Device

The AquaShield™, Inc. Aqua-Swirl® XCelerator hydrodynamic separator recently completed verification testing in compliance with the NJDEP HDS Laboratory Testing Protocol. As specified by the "*Procedure for Obtaining Verification of a Stormwater Manufactured Treatment Device from New Jersey Corporation for Advanced Technology*," this letter serves as the AquaShield™, Inc. statement that all procedures and requirements identified in the above-cited protocol and process document were met or exceeded. All Aqua-Swirl® XCelerator Model XC-2 sediment removal efficiency and scour tests were conducted at the AquaShield™ laboratory facility in Chattanooga, Tennessee under the direct and independent supervision of Nicholas Tovar of Southern Environmental Technologies, Inc., Sewanee, Tennessee. The observer was approved per the Quality Assurance Project Plan dated February 2019. All water quality samples were analyzed by the independent analytical laboratory, AIRL, Inc. of Cleveland, Tennessee. Both the sediment removal efficiency and scour testing particle size distributions were prepared by Good Harbour Laboratories of Mississauga, Ontario and analyzed by Maxxam Analytics of Mississauga. Preparation of the verification report and the supporting documentation fulfill the submission requirements of the process document and protocol.

Sincerely,

AquaShield™, Inc.

Mark B. Miller

Mark B. Miller
Research Scientist

2733 Kanasita Drive, Suite 111 • Chattanooga, TN 37343 • Phone (423) 870-8888 • www.aquashieldinc.com

Southern Environmental Technologies, Inc.

900 Old Sewanee Road, Sewanee, TN 37375

Phone: 423-605-5569 Fax: 423-710-3094

www.southernenvironmental.us

March 12, 2019

Dr. Richard Magee
Executive Director
New Jersey Corporation for Advanced Technology

RE: Third party observation of testing of the Aqua-Swirl XCelerator Model XC-2 according to the New Jersey Department of Environmental Protection (NJDEP) Laboratory Protocol to Assess Total Suspended Solids Removal by a Hydrodynamic Sedimentation Manufactured Treatment Device (January 25, 2013)

Dear Dr. Magee,

The purpose of this letter is to confirm that I directly witnessed all of the Aqua-Swirl XCelerator Model XC-2 testing conducted at the AquaShield facility in Chattanooga, Tennessee from February 18-22 and on March 4 and 7, 2019. I can attest that the testing was done in accordance with the above referenced protocol, as required by the Procedure for Obtaining Verification of a Stormwater Manufactured Treatment Device from New Jersey Corporation for Advanced Technology, for use in accordance with the Stormwater Management Rules N.J.A.C. 7:8 (January 25, 2013).

Prior to testing, I witnessed the unsealing of the test sediment for TSS Removal Efficiency and Scour Testing that had been mixed and supplied to AquaShield by Good Harbour Laboratories of Mississauga, Ontario.

During the testing, I witnessed the sampling during every run and personally weighed all influent test sediment feed samples. I also inspected all sample bottle labels and confirmed the chains of custody for all analyzed samples. I have retained copies of the field notes and this supporting information is available to you upon request.

Sincerely

Nicholas Tovar
Project Manager

CC: Mark Miller & Stuart Ellis, AquaShield, Inc.

Southern Environmental Technologies, Inc.

900 Old Sewanee Road, Sewanee, TN 37375

Phone: 423-605-5569 Fax: 423-710-3094

www.southernenvironmental.us

March 12, 2019

Dr. Richard Magee
Executive Director
New Jersey Corporation for Advanced Technology

RE: Performance Verification of the Aqua-Swirl XCelerator Model XC-2

Dear Dr. Magee,

I have been contracted, as a representative of Southern Environmental Technologies, Inc., by AquaShield, Inc., to witness the performance testing of their Aqua-Swirl XCelerator Stormwater Treatment System using a Model XC-2, in accordance with the New Jersey Department of Environmental Protection (NJDEP) Laboratory Protocol to Assess Total Suspended Solids Removal by a Hydrodynamic Sedimentation Manufactured Treatment Device (January 25, 2013).

Southern Environmental Technologies, Inc. (SET) is an independent Environmental and Civil Engineering Field Services Company located in Sewanee, Tennessee.

I, the undersigned, on behalf of SET, confirm:

- that I do not have any conflict of interest in witnessing the contracted testing. Potential conflict of interest may arise, in particular, as a result of economic interests, political or national affinities, family or emotional ties, or any other relevant connection or shared interest;

- that I will inform NJCAT, without delay, of any situation constituting a conflict of interest or potentially giving rise to a conflict of interest;

- that I have not granted, sought, attempted to obtain or accepted and will not grant, seek, attempt to obtain, or accept any advantage, financial or in kind, to or from any party whatsoever, constituting an illegal or corrupt practice, either directly or indirectly, as an incentive or reward relating to the award of the contract.

Sincerely,

Date

Nick Tovar

March 12, 2019

Nick Tovar
Project Manager
Southern Environmental Technologies, Inc.

CC: Mark Miller & Stuart Ellis, AquaShield, Inc.

Center for Environmental Systems
Stevens Institute of Technology
One Castle Point
Hoboken, NJ 07030-0000

April 12, 2019

Gabriel Mahon, Chief
NJDEP
Bureau of Non-Point Pollution Control
Bureau of Water Quality
401 E. State Street
Mail Code 401-02B, PO Box 420
Trenton, NJ 08625-0420

Dear Mr. Mahon,

Based on my review, evaluation and assessment of the testing conducted on the Aqua-Swirl® XCelerator (Model XC-2) Stormwater Treatment System by AquaShield conducted in Chattanooga, Tennessee at the hydraulics laboratory of AquaShield™, Inc. under the supervision of Southern Environmental Technologies, Inc. of Sewanee, Tennessee, the test protocol requirements contained in the "New Jersey Laboratory Testing Protocol to Assess Total Suspended Solids Removal by a Hydrodynamic Sedimentation Manufactured Treatment Device" (NJDEP HDS Protocol) were met or exceeded. Specifically:

Test Sediment Feed

The mean PSD of the AquaShield test sediments comply with the PSD criteria established by the NJDEP HDS protocol. The AquaShield removal efficiency test sediment PSD analysis was plotted against the NJDEP removal efficiency test PSD specification. The test sediment was shown to be finer than the sediment blend specified by the protocol (<75µ); the test sediment d_{50} was approximately 66 microns. The scour test sediment PSD analysis was plotted against the NJDEP removal efficiency test PSD specification and shown to be significantly finer than specified by the protocol.

Removal Efficiency Testing

In accordance with the NJDEP HDS Protocol, removal efficiency testing was executed on the Aqua-Swirl® Model XC-2, a 2.5 ft. diameter commercially available unit, in order to establish

the ability of the Aqua-Swirl to remove the specified test sediment at 25%, 50%, 75%, 100% and 125% of the target MTFR. The Aqua-Swirl® Model XC-2 demonstrated 50.7% annualized weighted solids removal as defined in the NJDEP HDS Protocol. The flow rates, feed rates and influent concentration all met the NJDEP HDS test protocol's coefficient of variance requirements and the background concentration for all five test runs never exceeded 20 mg/L.

Scour Testing

In order to demonstrate the ability of the Aqua-Swirl to be used as an online treatment device scour testing was conducted at greater than 200% of MTFR in accordance with the NJDEP HDS Protocol. The average flow rate during the online scour test was 1.16 cfs, which represents 201% of the MTFR (MTFR = 0.57 cfs). Background concentrations were ≤16 mg/L throughout the scour testing, which complies with the 20 mg/L maximum background concentration specified by the test protocol. Unadjusted effluent concentrations ranged from 19 mg/L to 42 mg/L. When adjusted for background concentrations, the effluent concentrations range from 10 to 31 mg/L with a mean of 17.1 mg/L. These results confirm that the Aqua-Swirl® Model XC-2 did not scour at 201% MTFR and meets the criteria for online use.

Maintenance Frequency

The predicted maintenance frequency for all models is 30 months.

Sincerely,

Richard S. Magee, Sc.D., P.E., BCEE

8. References

ASTM D422-63. *Standard Test Method for Particle Size Analysis of Soils.*

ASTM D3977-97. *Standard Test Methods for Determining Concentrations in Water Samples.*

NJCAT November 2016, *NJCAT Technology Verification, Aqua-Swirl® Stormwater Treatment System, AquaShield™, Inc.,* *http://www.njcat.org/uploads/newDocs/AquaSwirlNJCATReportFinal.pdf*.

NJCAT June 2018, *NJCAT Technology Verification, Aqua-Filter™ Stormwater Filtration System with Perlite Media, AquaShield™, Inc.,* *http://www.njcat.org/uploads/newDocs/AquaFilterStormwaterFiltrationSystemFinal61118.pdf*.

NJDEP 2013a. *New Jersey Department of Environmental Protection Procedure for Obtaining Verification of a Stormwater Manufactured Treatment Device from New Jersey Corporation for Advanced Technology*. Trenton, NJ. January 25, 2013.

NJDEP 2013b. *New Jersey Department of Environmental Protection Laboratory Protocol to Assess Total Suspended Solids Removal by a Hydrodynamic Sedimentation Manufactured Treatment Device.* Trenton, NJ. January 25, 2013.

VERIFICATION APPENDIX

Introduction

- Manufacturer: AquaShield™, Inc., 2733 Kanasita Drive, Suite 111, Chattanooga, Tennessee 37343. *General Phone: (423) 870-8888*. Website: www.aquashieldinc.com.

- MTD: Aqua-Swirl® XCelerator Stormwater Treatment System (Aqua-Swirl® XCelerator). Verified Aqua-Swirl® XCelerator models are shown in **Table A-1**.

- TSS Removal Rate: 50%

- Offline or Online installation

Detailed Specification

- NJDEP sizing and dimension tables are attached as **Table A-1** and Table **A-2**, respectively.

- Pick weights and installation procedures vary with model size. AquaShield™ provides contractors with project-specific unit pick weights and installation instructions as warranted prior to delivery.

- AquaShield™ recommends that the units be cleaned when sediment depth reaches 6 inches, representing 50% sediment storage capacity.

- An Inspection and Maintenance Manual is provided for each project installation and is available at: https://tinyurl.com/Aqua-Swirl-NJDEP-IM.

- According to N.J.A.C. 7:8-5.5, NJDEP stormwater design requirements do not allow a hydrodynamic separator such as the Aqua-Swirl® XCelerator to be used in series with another hydrodynamic separator to achieve an enhanced TSS removal rate.

Table A-1 MTFRs and Required Sediment Removal Intervals for Aqua-Swirl® XCelerator Models

Model	Manhole Diameter (ft)	NJDEP 50% TSS Maximum Treatment Flow Rate (cfs)	Treatment Area (ft^2)	Hydraulic Loading Rate (gpm/ft^2)	50% Maximum Sediment Storage Volume (ft^3)	Required Sediment Removal Interval[1] (months)
XC-2	2.5	0.57	4.91	52.5	2.46	30
XC-3	3.5	1.13	9.62	52.5	4.81	30
XC-4	4.5	1.86	15.90	52.5	7.95	30
XC-5	5.5	2.78	23.76	52.5	11.88	30
XC-6	6.5	3.88	33.18	52.5	16.59	30
XC-7	7.5	5.17	44.18	52.5	22.09	30
XC-8	8.5	6.64	56.75	52.5	28.37	30
XC-9	9.5	8.29	70.88	52.5	35.44	30
XC-10	10.5	10.13	86.59	52.5	43.30	30
XC-11	11.5	12.15	103.87	52.5	51.93	30
XC-12	12.5	14.35	122.72	52.5	61.36	30
XC-13	13	15.53	132.73	52.5	66.37	30

$$\text{Sediment Removal Interval (months)} = \frac{(\text{50\% HDS MTD Max Sediment Storage Volume} * 3.57)}{(\text{MTFR} * \text{TSS Removal Efficiency})}$$

Required sediment removal interval calculated using equation specified in Appendix B, Part B of the NJDEP Laboratory Protocol for HDS MTDs.

Table A-2 Standard Dimensions for Aqua-Swirl® XCelerator Models

Model	Maximum Treatment Flow Rate (cfs)	Depth Below Invert (DBI)[1] (ft)	Scaling Depth[2] (ft)	Aspect Ratio Depth: Dia[3]	Sediment Sump Depth (ft)
XC-2	0.57	3.17	2.67	1.07	1.0
XC-3	1.13	4.24	3.74	1.07	1.0
XC-4	1.86	4.59	4.09	0.91	1.0
XC-5	2.78	5.49	4.99	0.91	1.0
XC-6	3.88	6.40	5.90	0.91	1.0
XC-7	5.17	7.31	6.81	0.91	1.0
XC-8	6.64	8.22	7.72	0.91	1.0
XC-9	8.29	9.12	8.62	0.91	1.0
XC-10	10.13	10.03	9.53	0.91	1.0
XC-11	12.15	10.94	10.44	0.91	1.0
XC-12	14.35	11.85	11.35	0.91	1.0
XC-13	15.53	12.30	11.80	0.91	1.0

[1] DBI is the depth from the invert of inlet pipe to the bottom of the unit.

[2] Scaling depth is the DBI minus 0.50 feet (6 inches), the location of the false floor of the tested unit.

[3] The aspect ratio of scaling depth/model diameter for the tested unit is 1.07. An aspect ratio of 1.07 ± 15% indicates that the treatment depth of the model is proportional as required by the protocol based on the tested model ratio of scaling depth to manhole diameter.